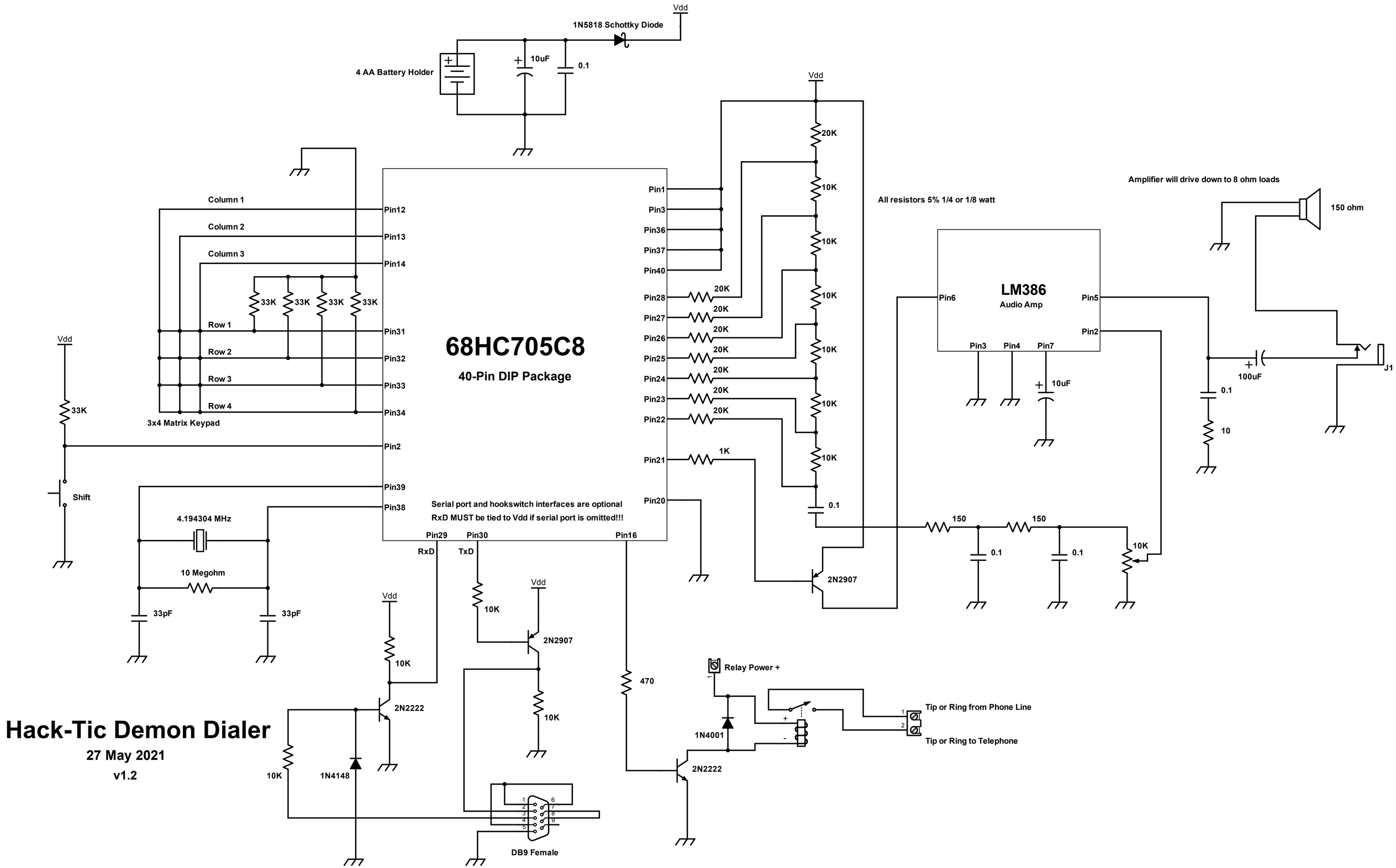

Hack-Tic Demon Dialer

27 May 2021

v1.2