TAP

$2.00 June 1991
Issue # 105

#105

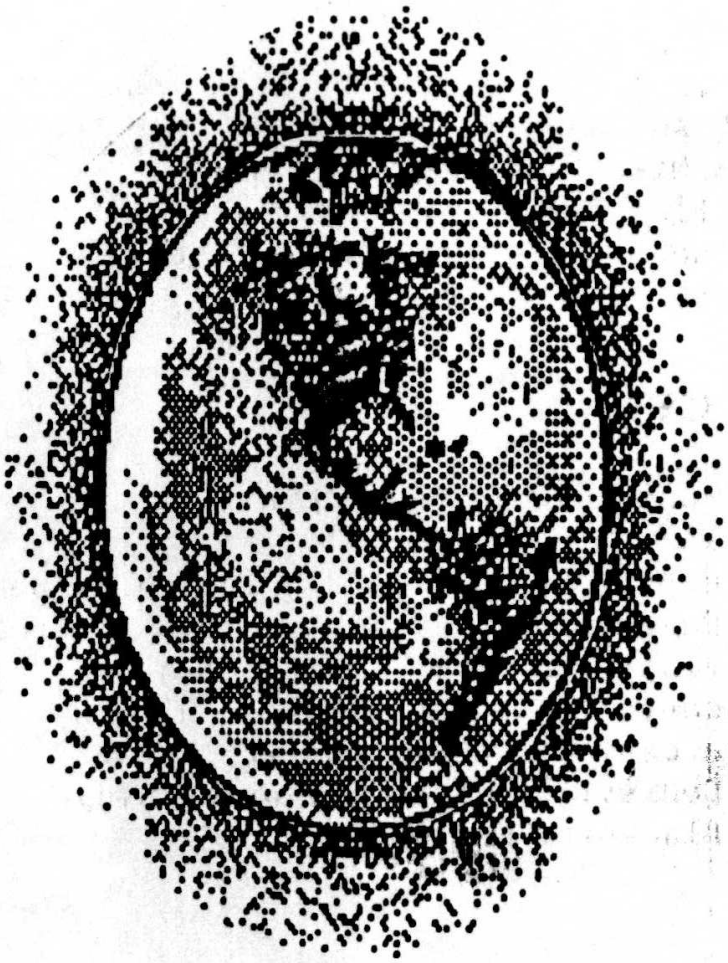

TAP Magazine
P.O. Box 20264
Louisville, Ky 40250-0264

91

TAP Magazine Staff Listing For Issue 105

PredatOr - Editor & Publisher
Schilke - Typesetter

Contents - Page 1
DNA Box Part 4 Pages 2-5
VMS Mailing Page 5
Air Show Page 6
976/900 Call Blocking Article Page 7
911 Incident Initiation Page 8
Listing of 1800 Prefixes by State Pages 9 & 10
SCB Tank Ad Page 11
Wireless Mike Plans Pages 12 & 13
Applied Blue Bxoing by Olorin The White Pages 14-17
Making Thermite by Pyromaniac Page 17
Fact Sheet Five Ad Page 18

$2.00

June 1990 Mutha fuckin 1.
TAP is BACK, No Sellout.
Copyright (c) 1991 by Tap Magazine
Unauthorized Duplication is a direct violation of the United States copyright laws. Please don't buy a copy of TAP unless it's from Louisville, Kentucky or Redwing Blackbird Mailorder.

Subscriptions to TAP Magazine.

United States $10.00 / 10 Issues
Canada $15.00 / 10 Issues
Overseas $25.00 / 10 Issues
Sample Issues $2.00 & SASE
Donations Greatly Appreciated
BBS Phone #502/499-8933
New User Password Below.
Columbian Coke

THE DNA BOX

Hacking Cellular Phones
by
The Outlaw Telecommandos

P A R T F O U R

Preliminary technical info about the AMPS (Advanced Mobile Phone System).

MOBILE TELEPHONE SWITCHING OFFICE (MTSO)
Cell Control Sites (Towers) are connected to the Mobile Telephone Switching Office (MTSO) by a pair of 9600 baud data lines, one of which is a backup. The MTSO routes calls, controls and coordinates the cell sites (especially during handoffs as a mobile phone moves from one cell to another while a call is in progress), and connects to a Central Office (CO) of the local telephone company via voice lines.
There is some indication that an MTSO may be re-programmed and otherwise hacked via standard phone lines using a personal computer/modem.

NUMERIC ASSIGNMENT MODULE (NAM)
There is a PROM chip in every cellular phone that holds the phone number (MIN) assigned to it. This is the "Numerical Assignment Module" or NAM. Schematics and block diagrams occasionally call this the "ID PROM". The NAM also holds the serial number (ESN) of the cellular phone, and the system ID (SID) of the mobile phone's home system.
By encoding new PROM chips (or re-programming EPROM chips) and swapping them with the originals, a cellular phone can be made to take on a new identity. It is possible to make a circuit board with a bank of PROMs that plugs into the NAM socket, and allows quick switching between several phone ID's. It's even feasible to emulate the behavior of a PROM with dual-port RAM chips, which can be instantly updated by a laptop computer.

A photograph of a "BYTEK S1-KX NAM Multiprogrammer" suggests that this "sophisticated piece of equipment" is merely a relabled generic PROM burner.

==========

MOBILE IDENTIFICATION NUMBER (MIN)
The published explanations of how to compute this number all contain deliberate errors, probably for the purpose of thwarting phreaks and people attempting to change the serial numbers and ID codes of stolen phones. Even the arithmetic is wrong in some published examples!
Until the FCC/IEEE spec is available (a trip is planned to a university engineering library) the following is almost certainly the way that MIN is computed, taking into consideration how such codings are done elsewhere, comparing notes and tables from a variety of sources, and using common sense.

A BASIC program (MIN.BAS) that computes MINs from phone numbers is being distributed with this file.

There are two parts to the 34-bit MIN.
They are derived from a cellular phone number as follows:

MIN2 - a ten bit number representing the area code.

Look up the three digits of area code in the following table:

Phone Digit: 1 2 3 4 5 6 7 8 9 0
Coded Digit: 0 1 2 3 4 5 6 7 8 9

Continued next page

(Or just add 9 to a digit and use the right digit of the result)

Then convert that number to a 10-digit binary number:

For example, for the (213) area code, MIN2 would be 102,
which expressed as a 10-digit binary number would be 0001100110.

```
   Area Code = 213          (get Area Code)
               102          (add 9 to each digit modulo 10, or use table)
        MIN2 = 0001100110   (convert to binary)
```

MIN1 - a 24 bit number representing the 7-digit phone number.

The first ten bits of MIN1 are computed the same way as MIN2, only
the next 3 digits of the phone number are used.
The middle four bits of MIN1 are simply the fourth digit of the phone number
expressed in binary (Remember; a "0" becomes a "10").
The last next ten bits of MIN1 are encoded using the final three digits of
the phone number in the same way.

So, MIN1 for 376-0111 would be:

```
(get Phone Number)                        376   0  111
(modify digits where appropriate)         265 (10) 000
(convert each part to a binary number)    0100001001 1010 0000000000
```

Thus the complete 34-bit Mobile Identification Number for (213)376-0111 is:

```
                 376      0      111        213
               ________  __  ________  ________
              /         \/  \/        \/        \
      MIN  =  0100001001101000000000000001100110
              \____________________/\________/
                        MIN1              MIN2
```

ELECTRONIC SERVICE NUMBER (ESN)
The serial number for each phone is encoded as a 32 bit binary number.

Available evidence suggests that the ESN is an 8-digit hexadecimal
number, which is encoded directly to binary:

```
 Serial Number  =   821A056F
        Digits  =   8    2    1    A    0    5    6    F
           ESN  =   0001 0001 0001 1010 0000 0101 0110 1111
```

Here is a table for converting Hexadecimal to Binary:

Hex	Binary	Hex	Binary	Hex	Binary	Hex	Binary
0	0000	4	0100	8	1000	C	1100
1	0001	5	0101	9	1001	D	1101
2	0010	6	0110	A	1010	E	1110
3	0011	7	0111	B	1011	F	1111

SYSTEM IDENTIFICATION (SID)

Continued next page

A 15 bit binary number representing a mobile phone's home cellular system.

==========

----------CELLULAR PHONE FREQUENCIES----------
Here, again, are the frequency range assignments for Cellular Telephones:

Repeater Input (Phone transmissions) 825.030 - 844.980 Megahertz
Repeater Output (Tower transmissions) 870.030 - 889.980 Megahertz

There are 666 Channels. Phones transmit 45 MHz below the corresponding Tower channel. The channels are spaced every 30 KHz.

These channels are divided into "Nonwireline" (A) and "Wireline" (B) services.

Nonwireline (A) service uses the 825-835/870-880 frequencies (channels 1-333)
Wireline (B) service uses the 835-845/880-890 frequencies (channels 334-666)

A channel is either dedicated to control signals, or to voice signals. Digital message streams are sent on both types of channels, however.

There are 21 control channels for each service.

Non-Wireline (A) control channels are located in the frequency ranges 834.39 - 834.99 and 879.39 - 879.99 (channels 312 - 333)

Wireline (B) control channels are located in the frequency ranges 835.02 - 835.62 and 880.02 - 880.62 (channels 334 - 355)

The new 998 channel systems use 332 additional channels in the ranges 821-825/866-870 and 845-851/890-896.

Cell Control Sites (Towers) are connected to an MTSO (Mobile Telephone Switching Office) which connects the cellular system to a Central Office (CO) of a conventional telephone system.

Each Cell Control Site uses a maximum of 16 channels, up to 4 of which may be control channels. There will always be at least 1 control channel available in each cell. Cellular Towers are easily identified by the flat triangular platforms at the top of the mast, with short vertical antennas at each corner of the platform.

Most UHF Televisions and cable-ready VCR's are capable of monitoring Cellular Phone channels. Try tuning between UHF TV channels 72 - 76 for mobile phones, and between UHF TV channels 79 - 83 for towers.

SUPERVISORY AUDIO TONE (SAT)
A mobile phone must be able to recognize and retransmit any of the three audio frequencies used as SAT's.

These tones (and their binary codes) are:
(00) 5970 Hz
(01) 6000 Hz
(10) 6030 Hz

The SAT is used during signaling, but not during data transmission. The binary codes are sent during data transmission to control which of the SAT tones a mobile phone will be using.
Each cell site (or tower) uses only one of the three SATs. The mobile

Continued next page

transmitter returns that same SAT to the tower.
Tone recognition must take place within 250 milliseconds.

SIGNALING TONE (ST)
A 10 KHz tone is used for signaling by mobile phones during alert, handoff, certain service requests, and diconnect.

DATA TRANSMISSION
Cellular Phones use a data rate of 10 Kilobits per second, and must be accurate to within one bit per second.
Frequency Modulation (FM) is used for both voice and data transmissions.
Digital data is transmitted as an 8KHz frequency shift of the carrier.
A binary one is transmited as a +8KHz shift and a binary zero as a -8KHz shift. NRZ (Non-Return to Zero) coding is used, which means that the carrier is not shifted back to it's center frequency between transmitted binary bits.

Using VMSmail with EDT

Boulder Campus Mail Address Formats

From VMS machines:

Destination	Address Format	Example
Your VMS host	*username*	jdoe
Another VMS host*	*VMS-host*::*username*	jila::jdoe
UNIX host	in::"*username@host*"	in::"doe@boulder
BITNET host	in::"*username@host*"	in::"jdoe@oberlin"
Internet host	in::"*username@host.domain*"	in::"tom@hao.ucar.edu"
unknown UCB host	in::"*username@host*.colorado.edu"	in::"friend@mystery.colorado.edu"

* While most VMS usernames follow the `lastname_first initial` (and possibly middle initial) syntax, this convention isn't consistent across the campus. Please be aware of this inconsistency before you send electronic mail to users on other systems. Consult 411, the on-line electronic mail directory for assistance.

420

"Desert Storm" Productions Presents:

Baghdad's First Ever

Air Show!

Round-The-Clock Demonstrations By:
Air Force * Marines * Army * Navy

Free Admission - Free Parking (Bomb Shelters Available)

Show Begins January 16, 1991 And Runs Until Further Notice

Daily Events:

- Bombing Demonstrations
- Cruise Missile Fly-By's
- Runway Demolitions
- Supersonic Overhead Passes
- 20MM Strafing Runs
- Ground Troop Maneuvers
- 'Smart Bomb' Chimney-Drop Contest
- Invasion Tactics
- Wire-Guided Anti-Tank Ordinance
- 30MM Armor-Piercing Ammunition
- 7.62MM Mini-Gun Shoot-Off
- Artillery Duels

Special Night Show (starts at sundown): Tracer & Incendiary Ammunition Demo
Cluster Bomb 'House-Cleaning'
Anti-Aircraft Gun Exhibitions

See:

- **F-4 Wild Weasels**
- **A-6 Intruders**
- **F-18 Hornets**
- **B-52 Stratofortresses**
- **F-15 Eagles**
- **A-10 Wart Hogs**

Added Attraction! Special Off-Site Missile Tournament: **"Scud's versus the Patriot's"**
- Held nightly in nearby Tel Aviv (shuttle busses depart every 30 minutes).
- Also includes admission to Israel's First Annual Nerve Gas Festival (gas masks included).

Free Gift! The first 500 people daily receive an official U.S. Government "Gun Camera" video. Tape also includes recent satellite reconnaissance photos (specify VHS or Beta).

Monthly charge eliminated for blocking "900" and "976" calls; installation charge waived

A variety of entertainment and information is available via "900" and "976" services. These services allow vendors to offer recorded messages such as sports updates, stock market reports, medical and legal advice, jokes and other information over telephone lines.

"900" and "976" services are provided by "information service" vendors. These vendors are solely responsible for the quality and content of their messages. Each call to a "900" or "976" telephone number will result in an additional charge on your telephone bill. The amount of the charge is set by the vendor of the service, not by South Central Bell.

outh Central Bell offers options for blocking calls to "900" and "976" umbers. There is only a small one-time fee for providing this blocking ervice. If you request "900/976" blocking between April 15, 1991 and ine 15, 1991, South Central Bell will waive the installation fee associted with blocking. Monthly "900/976" blocking fees have been eliminated.

you currently subscribe to "900/976" blocking, it is not necessary to ontact South Central Bell. Your monthly fee will automatically be eliiated from your bill.

or more information or to sign up for blocking options, please call your CB service representative during regular business hours at 557-6500 esidence customers) or 557-6000 (business customers). There's no charge r calling either number.

South Central Bell
A BELLSOUTH Company

6/4

INCIDENT INITIATION

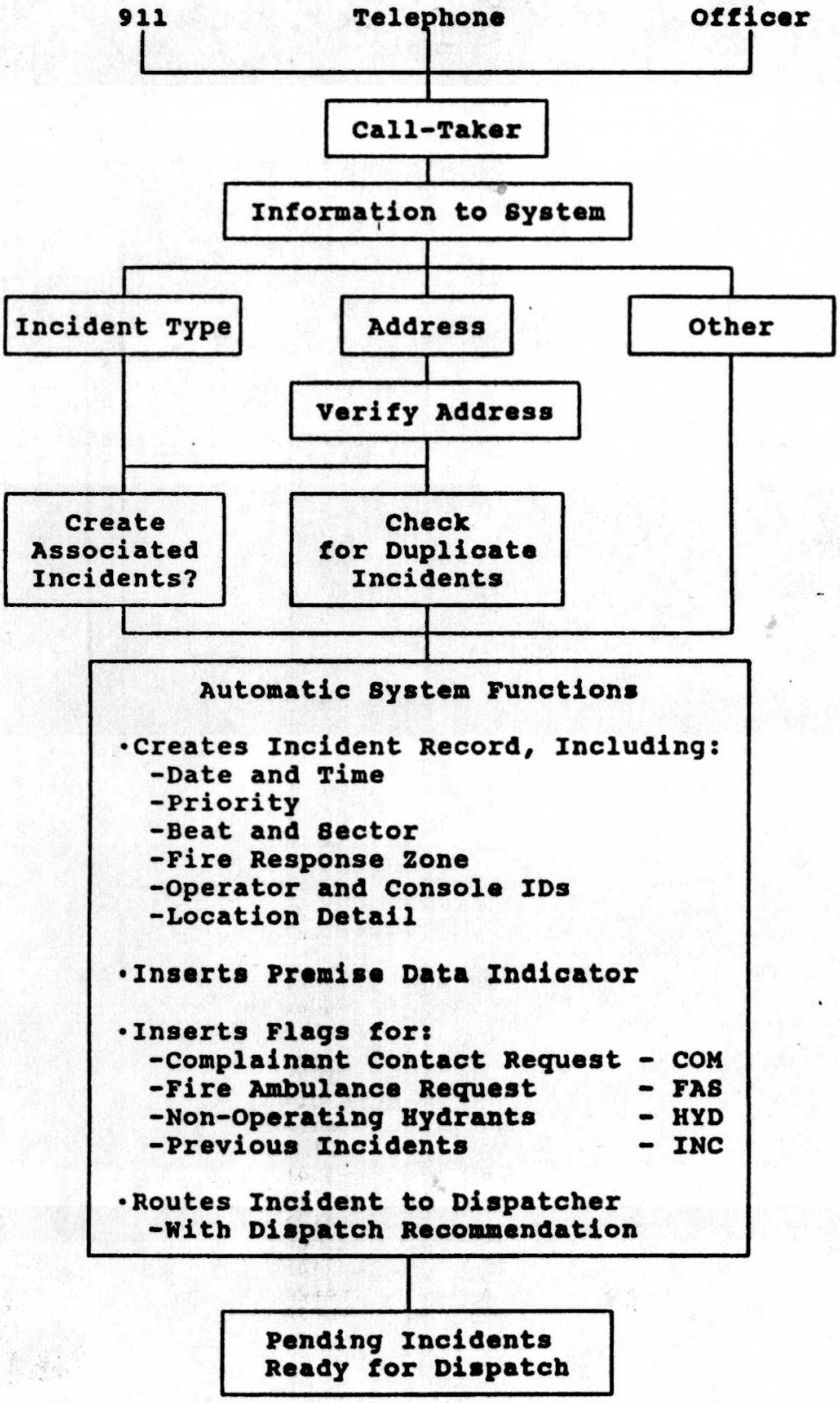

Waging wa

State	800 Prefix	NPA served	
Alabama	633	<205>	
Alaska	544	<907>	
Arizona	528	<602>	
Arkansas	643	<501>	
California	227	<415>	
	421	<213>	
	423	<213>	
	854	<714>	
	824	<916>	
	538	<408>	
	235	<805>	
	344	<209>	
	358	<707>	
Colorado	525	<303>	
	255	<303>	
Connecticut	243	<203>	
Delaware	441	<302>	
District of Columbia	424	<202>	
	368	<202>	For high volume traffic
Florida	327	<305>	
	237	<813>	
	874	<904>	
Georgia	841	<912>	
	*241	<404>	
	554	<404>	
Hawaii	367	<808>	
Idaho	*635	<208>	
Illinois	621	<312>	
	323	<312>	
	637	<217>	
	435	<815>	
	447	<309>	
	851	<618>	
Indiana	428	<317>	
	457	<812>	
	348	<219>	
Iowa	553	<319>	
	*247	<515>	
	831	<712>	
Kansas	835	<316>	
	255	<913>	
Kentucky	626	<502>	
	354	<606>	
Louisiana	535	<504>	
	551	<318>	
Maine	341	<207>	
Maryland	368	<301>	
Massachusetts	343	<617>	
	225	<617>	
	628	<413>	
Michigan	253	<616>	
	521	<313>	
	338	<906>	
	517	<248>	
Minnesota	328	<612>	
	533	<507>	
	*346	<218>	

BE

TAP Magazine
P.O. Box 20264
Louisville, KY 402

8/17

ar against

Mississippi	647	<601>	
Missouri	821	<816>	
	325	<314>	
	641	<417>	
Montana	*548*	<406>	
Nebraska	228	<402>	
	445	<308>	
Nevada	*634	<702>	Las Vegas
	648	<702>	Reno
New Hampshire	258	<603>	
New Jersey	257	<609>	
New Mexico	545	<505>	
New York	223	<212>	
	847	<607>	
	221	<212>	
	431	<914>	
	828	<716>	
	645	<516>	
	448	<315>	
	833	<518>	
North Carolina	334	<919>	
	438	<704>	
North Dakota	*437	<701>	
Ohio	321	<216>	
	543	<513>	
	537	<419>	
	848	<614>	
Oklahoma	654	<405>	
	331	<918>	
Oregon	*547*	<503>	
Pennsylvania	523	<215>	
	345	<215>	
	458	<814>	
	245	<412>	
	233	<717>	
Puerto Rico	468	<809>	
Rhode Island	556	<401>	
South Carolina	*845*	<803>	
South Dakota	*843*	<605>	
Tennessee	251	<615>	
	238	<901>	
Texas	527	<214>	
	433	<817>	
	531	<512>	
	231	<713>	
	351	<915>	
	858	<806>	
Utah	453	<801>	
Vermont	*451	<802>	
Virginia	446	<804>	
	368	Arlington - (for D.C.)	
	336	<703>	
Virgin Islands	524	<809>	
Washington	426	<206>	
	541	<509>	
West Virginia	624	<304>	
Wisconsin	*356	<608>	
	558	<414>	
Wyoming	443	<307>	

We Build Our Pay Phones The Same Way.

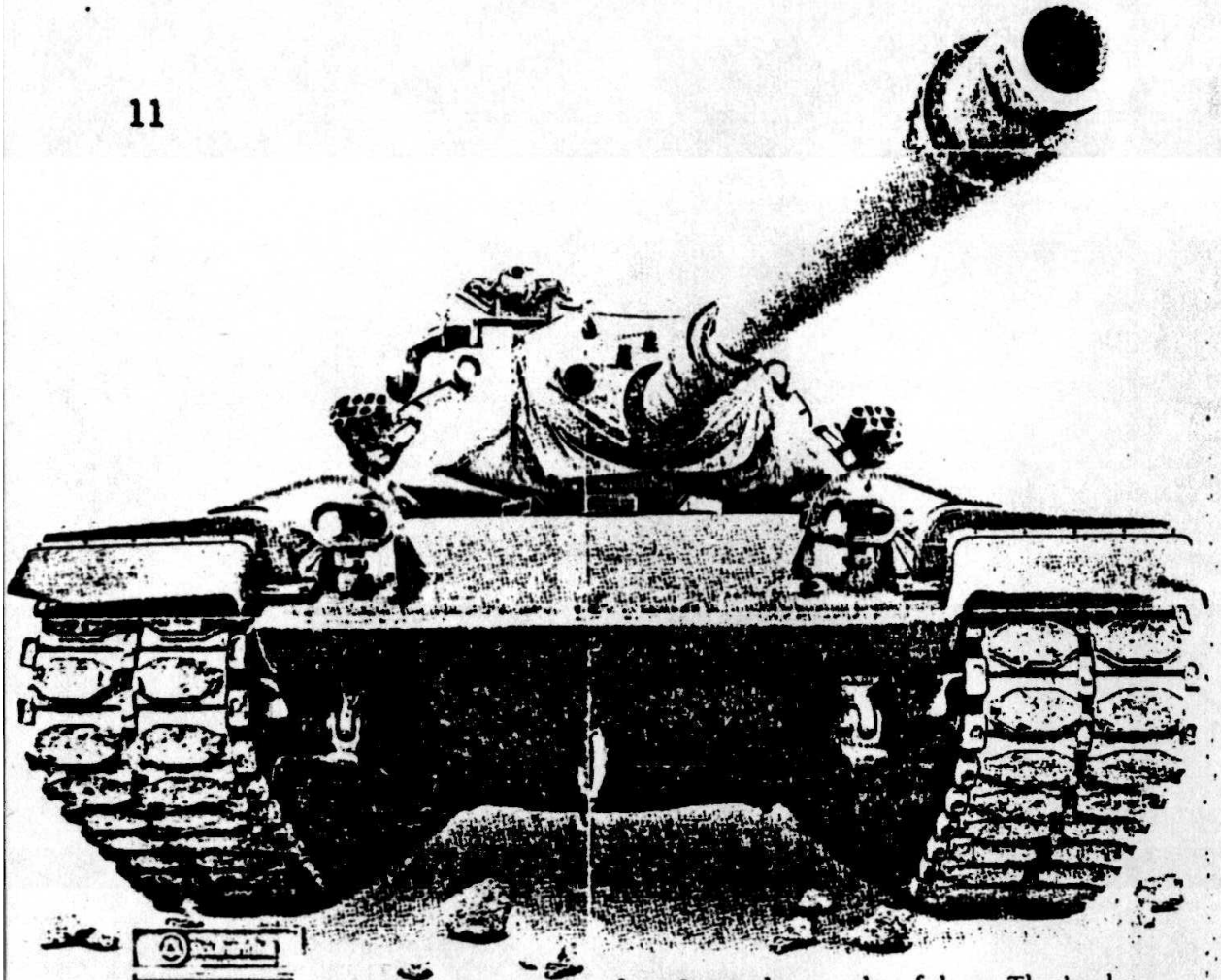

A public phone gets a lot of use. It can also get a lot of abuse. That's why Southern Bell pay phones are designed to withstand the roughest conditions and the heaviest use.

We back our equipment with scheduled inspection and maintenance. If there ever is a problem, a service technician will repair the phone on the spot or replace it. Best of all, maintenance and repairs won't cost you a penny. And installation is free, too.

When your pay phone is from Southern Bell, we handle all refunds, user complaints, fraudulent calls and collections. All you have to handle are the commission checks we send to you.

Don't wait any longer. Get rolling today. Call toll free 1 800 451-5983 and find out just how much a Southern Bell pay phone can offer your business.

Southern Bell®
South Central Bell®

South Central Bell now offers TouchStar (tm) services. This includes call tracing, call blocking, call return, repeat dialing, call selector, and preferred call forwarding. The call tracing and call blocking features bother me. They are used to cut down on the prank/crank calls. I personally think the phone company should not charge for this type of service it should be provided FREE. Everyone has had a prank call of some type and they should be blocked as a customer service not as a paid option. If anyone would like to comment on these new services, or has them already installed on their phone and would like to do an article on them please feel free to send it to me for a future issue. These new services can easily put a stop to hackers and should be explored in more detail.

4-7

WIRELESS MICROPHONES

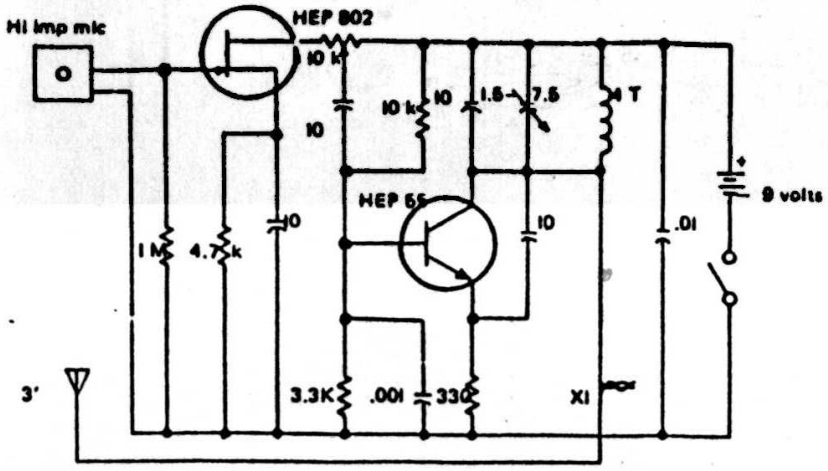

Wireless mic for commerical FM band. Tuning is accomplished by adjusting the variable cap. XI is made by twisting 2 inch lengths of small guage insulated wire together. Should give range of 2 blocks to ½ mile with good receiver. In any wireless mic a condenser mic can be substituted for the dynamic variety by simply adding a line to the power source as shown in the directions for the mic, this will give increased pick-up.

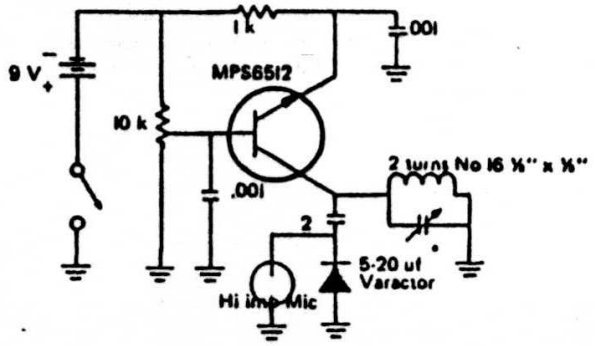

Ultra sub-mini transmitter uses modern circuit with a Poly Paks varactor to achieve FM modulation. Transmits about 300 ' in the commerical FM band directly from tank circuit. 3' antenna can be added to tank coil end for greater range. For super small power supply disassemble a 9 volt battery and use on bank of cells.

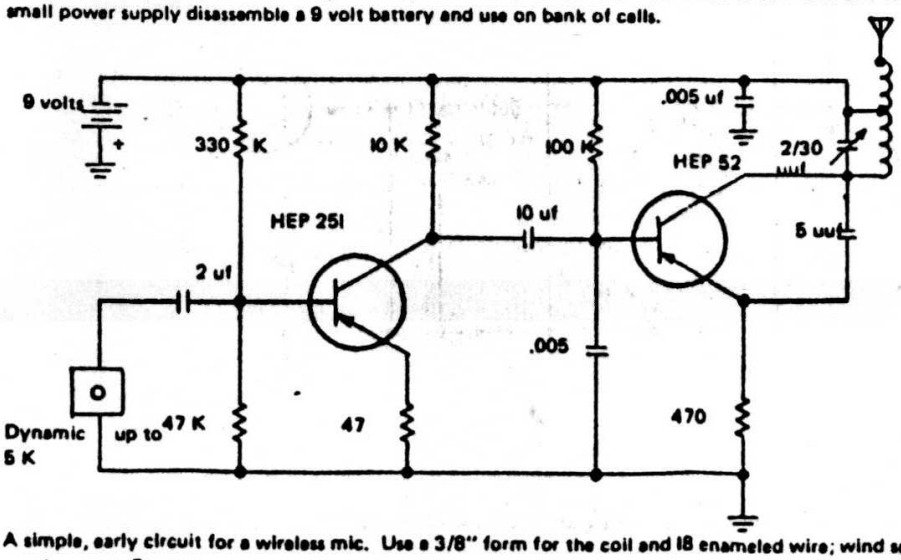

A simple, early circuit for a wireless mic. Use a 3/8" form for the coil and 18 enameled wire; wind seven turns, tap at number two. Frequency can be varied by adding or subtracting from coil. The first transistor is an audio amp (any good audio type will suffice) and the second an rf oscillator (again, any like type will work).

WIRELESS MICROPHONES

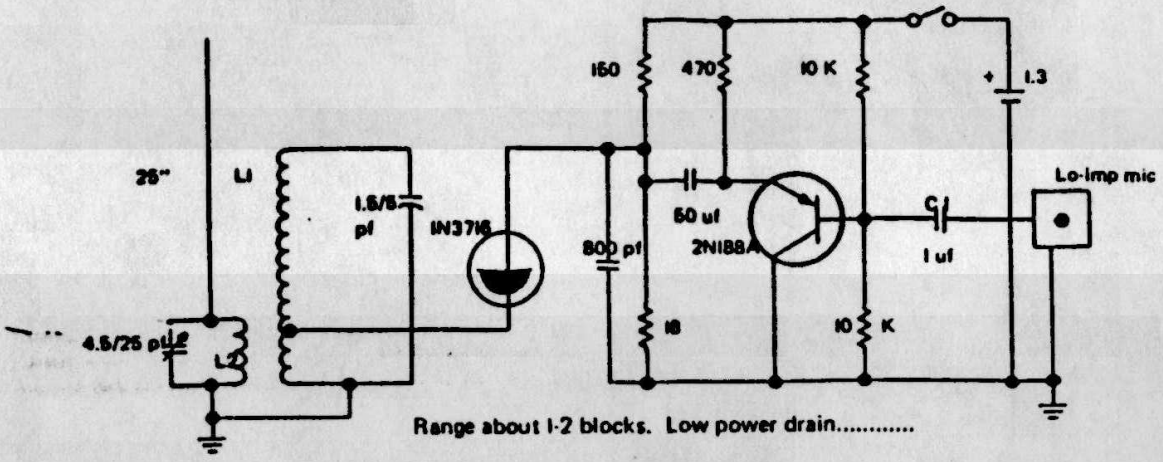

Range about 1-2 blocks. Low power drain.....

A unique circuit with a tunnel diode oscillating back to back with a transistor. This can be constructed in a very small space by using a 1.3 volt marcury cell for power. L1 is 6 turns No. 16 close-wound. Tap at 1 turn. L2 is 2 turns No. 16 wound 1/8". Use ceramic trimmer for L2 tank and electrolytic for C1.

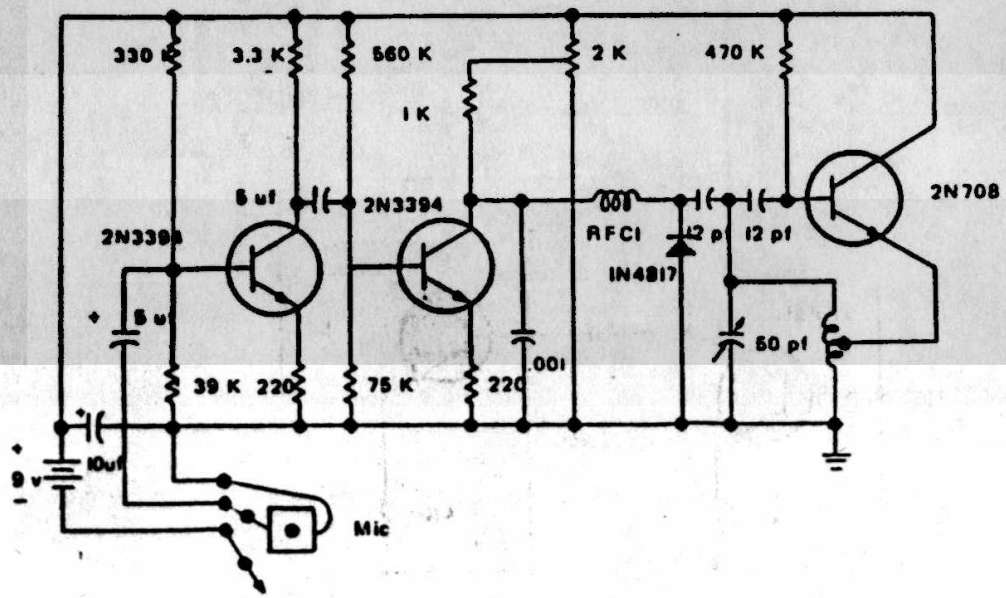

Diode modulates tuned circuit in commerical FM band. Coil is 4 turns No. 18, ¼" wide, 1" long, tap 2 from ground.

9/11

APPLIED BLUE BOXING I

by

OLORIN THE WHITE

****
* This tutorial is for informational purposes. It is NOT to be used to *
* commit phraud, theft, or any other immoral activity. *
****

In this tutorial I am going to explain how a phone phreak uses an electronic device, known as a blue box, to control and manipulate the telephone network. A phone phreak is a person who practices phreaking, which is the art of hands-on experience learning of telephone network operations. A blue box is a portable, hand held device that resembles a small box with a touch tone keypad on it. This is the main tool of the phone phreak (Bell, 1971).

Before the invention of the blue box, Ma Bell had a monopoly on communications. This forced the public to pay the outrageous rates demanded by Ma Bell. Things such as this, and the war tax added on to one's bill each month, produced a hatred for Ma Bell that was in the extreme. The blue box allowed not only the escape from the outrageous rates demanded by Ma Bell, which is theft of services under Federal law, but it also opened up the entire telephone network to whoever utilized a blue box (Hoffman, 1971).

The average blue box has 12 keys, a button, and a speaker. The 12 keys are used in routing calls. Keys 1-0 serve the same purpose as those on a touch tone phone. The other two keys are Key Pulse(KP), and STart(ST). The Multi-Frequency(MF) tones emitted for each key are according to a standard used for routing calls. When a person dials a long distance number directly, the number that person dials is converted to these frequencies since that is what the interoffice trunks respond to. Each Local Area Network(LAN) is controlled by its own Central Office. Interoffice trunks are network connections between COs (Johannessen, 1970).

The button is pressed to emit a pure 2600 Hz tone. When trunks are idle, they have a 2600 Hz coming from both ends of the trunk. If one end stops sending 2600 Hz, then the central office at the other end detects the lack of that tone and prepares that trunk for use. When one makes a long distance call, the central office seizes a trunk by ceasing the 2600 Hz tone being sent on its end of the trunk and then sends the appropriate number combination according to what one dials. When one hangs up, the 2600 Hz is put back on the line, letting the other end know that the trunk is now idle (Battista & Roscoe & Giguere, 1970).

A phone phreak uses his blue box by calling a long distance number, such as 1-800-555-1212 or 1-818-407-1000, in order to be routed over a trunk. Local calls are not routed through trunks. When the other end connects, the phone phreak emits the 2600 Hz tone into his line. This disconnects the called party by making the central office at the other end think that the caller has hung up. The phreak then stops sending the 2600 Hz and a trunk is seized due to the lack of the tone from his end (Prophet, 1987).

After seizing a trunk, the blue boxer can then enter the routing

Continued next page

information using the 12 keys on his blue box. The KP key always precedes all numbers entered. This prepares the trunk to receive routing codes. After all routing information is entered, the ST key must be pressed to alert the equipment to start routing the information that has been entered (Marauder, 1986). With certain switching systems, the keyed routing information must be timed correctly rather than keyed manually. This can easily be produced by having a programable blue box that one can input the routing information into and then press a button to output the routing information at the proper timed intervals between MF tones.

A blue box can be used to call numbers that one can call normally from any subscriber loop(home telephone), such as KP+NPA+NNX+DDDD+ST. NPA would be the area code, NNX the exchange, and DDDD is the last four digits. But, in using a blue box, a phone phreak can also access many other things not accessible using a touch tone phone, the scope of which is almost unimaginable. But, since a full discussion of the network is beyond the scope of this tutorial, I will only discuss a very small amount of these routings and their purposes (John, 1978).

The most informative person a phone phreak can call, using his blue box, is the universal rate and route operator. This operator is reached by keying KP+800+141+1212+ST. This operator assists other operators with rates and routings. Since only authorized people are supposed to be able to call things like this, the phone phreak will always be assumed to be another operator. There are three routing types that can be requested (Tabas, 1985).

Operator's route is used when asking for routes that are not over seas. Number's route is used when requesting over seas routes, and directories route is used for requesting operator directory assistance routes. The route type must be stated before requests to let the rate and route operator know which type a person is requesting (Tabas, 1985).

The inward operator is a very helpful person when it comes to things that someone can't do remotely or doesn't know how to do yet. These are just normal Traffic Services Position System(TSPS) operators who are assisting other TSPS operators. The TSPS operator is the operator one gets when one enters a 0 from his or her own touch tone phone. The only difference is that when another TSPS operator calls a TSPS operator, it is an inward call. A light on the TSPS operator's console notifies that operator that the call is an inward call (Marauder, 1986). The format for an inward is KP+NPA+TTC+1X1+ST. NPA is required when calling out of your HNPA, and the Terminating Toll Center(TTC) code is sometimes also required along with the NPA. TTC codes are in the format 0XX. 1X1 is the actual inward operator route. X represents any number from 0 to 9. One thing that an inward operator can do for someone is an emergency interrupt. To request an emergency interrupt on a certain line, one must call an inward operator in the same NPA as the line to be interrupted (Agent003, 1985). Busy Line Verification(BLV) trunks can only be used within the NPA it is located. If one wished to access the BLV trunk without the help of an inward operator, that person would have to know the screening code for that trunk. Screening code formats are 0XX. One would enter KP+0XX+NNX+DDDD+ST and he or she would be added into a 3-way port on the busy line (Phreaker, 1987).

In over seas calling, one must first dial the appropriate over seas gateway that handles the country one is dialing. This is done by entering KP+011+CC+ST. CC is the country code. When calling the over seas gateway, the country code should be padded to the left with zeros in order to make the CC 3 digits long. Once a person receives the international dial tone, he or she can enter KP+0+country code+city code+phone number+ST. When keying in the country code to the over

Continued next page

seas gateway, the country code is not padded with zeros. One can also call inwards in other countries by getting the number's route from the universal rate and route operator (Tabas, 1985).

Some countries do not have international direct-dial service. The best way around this is to connect with an inward operator in the closest country with international direct-dial service. Closest in this case meaning closest to the country that one wishes to dial into. He or she would then request that the inward deal with his or her call (Tabas, 1985).

Recently the telephone network has been implementing Common Channel Interoffice Signalling(CCIS). This method of trunk signalling is the same as the type we have discussed except that the 2600 Hz is replaced by 3700 Hz. Since nothing above 3000 Hz can be sent from a normal subscriber loop, this eliminates the possibility of blue boxing (Agent003, 1985).

Research is being conducted to locate test numbers that dial directly into trunks, therefore eliminating the need for sending a 3700 Hz (Agent003, 1985). Also, wire taps and satellite uplinks are being researched, but these are currently going very slow. It is not very desirable to get into a Ma Bell man hole and search for the right wire, nor is it inexpensive to own a satellite dish. Never the less, it can be said that as Ma Bell comes up with new security measures to prevent the phone phreak from blue boxing, the phone phreak will discover new ways around that security.

! This article was written for TAP !

Any corrections, updates, questions, or comments should be directed to the following address:

Olorin the White
C/O TAP
P.O. Box 20264
Louisville, KY 40250-0264

List of References:

Agent003, B. (1985, January). Basic telecommunications part vii. BIOC Agent003's Course In Basic Telecommunications, file 7. *

Battista R. N., & Roscoe, L. C. J., & Giguere, W. J. (1970). A new single-frequency signalling system. Bell Laboratories Record, 48 (3), 85-89.

Bell, A. (1971, July). Blue box is linked to phone call fraud. Youth International Party Line, pp. 1.

Hoffman, A. (1971, July). Strike the war machine. Youth International Party Line, pp. 3.

Johannessen, G. H. (1970). Signalling systems...an international concern. Bell Laboratories Record, 48 (1), 13-17.

Continued next page

John, D. (1978, May-June). Tandem scanning. Technological American Party, pp. 4-5.

Marauder, T. (1986). Understanding the traffic services position system part i - the console. Legion Of Doom Technical Journal, 1 (2), file 4. *

Phreaker, P. (1987, February). Busy line verification. Phrack Incorporated, file 10. *

Prophet, D. (1987, February). Telephone signalling methods. Phrack Incorporated, file 8. *

Tabas, M. (1985, January-February). Better homes and blue boxing. Mark Tabas Encounter Series, ff. 1-4. *

* -- These references were obtained solely from on-line computer services. This was necessary due to the fact that Ma Bell has in the past either coerced or actually stolen material out of the hands of published writers before they could publish that material. Due to the discovery of CCIS and CCITT6, Ma Bell did not hinder the writing of this paper.

Making Thermite

By The Pyromaniac

Thermite is a powerful substance which can burn through practically anything. It is especially of use in breaking into payfone cash boxes. Now, here's how you make it. It is very simple. The first step in making thermite is to make Hematite. Hematite is IRON OXIDE (Rust). Here is a good method of making large quantities of rust. You will electrolyze a metal rod, such as a IRON nail. You will need a source of DC power. A good source is a Train Transformer. Attach the nail to the POSITIVE wire. Now place the rod and the negative wire in opposite sides of a glass jar full of water. Add a little salt to the water (about a teaspoon) and leave it overnight. In the morning, there will be dark red crud in the jar. Filter all the crud from the water and heat in an iron pot until it turns a nice light red. The other ingredients you will need is aluminum filings. I suggest you buy them at a hardware shop. Make sure it is no less than 94% pure (Duralumin). Now mix it with the iron oxide. The ratio should be 8 grams of Iron Oxide per three grams of Aluminum filings. Thats Thermite! Now to light it. Stick a length of Magnesium Ribbon in a pile of the thermite (steal it from a chem-lab or buy it from the hardware store. If not order it from a chem supply house. Its pretty cheap.) The ribbon should stick into the thermite like a fuse. Now you light he magnesium with a blowtorch. Dont worry, the torch isnt hot enough to ignite the thermite. When the ribbon reaches the thermite, it will light. Get back from it, it can melt carbon steel so you can guess what it can do to human flesh.

The Magazine For Intelligent Reptiles

...and their hip human brethren. Each and every issue is loaded with reviews of small presses and other media from such diverse fields as punk, humor, science fiction, anarchy, homesteading, window washing, Zen, comics, folk rock, travel and unclassifiable oddness, as well as t-shirt, book, record, tape, CD and computer software reviews.

FACTSHEET FIVE

Surprise yourself by discovering a whole new universe of articulate nonconformists that you never knew existed. Get involved with new media, learn about fashions before they're fashionable, know the real names of pro wrestlers, find out secret chili recipes, and be the envy of your friends. All you have to do is subscribe to FACTSHEET FIVE and we'll show you where to go from there.

A sample copy, sent bulk mail, is $3.50, and an eight-issue subscription (over 1000 pages!) is $23. If you're in a hurry, a First Class mail sample is $5, and an eight-issue subscription is $33. Send cash, check, or money order, or phone us with your Mastercard or Visa handy (subscriptions only; sorry, no charges on sample issues):

FACTSHEET FIVE
6 Arizona Ave.
Rensselaer, NY 12144-4502
(518)-479-3707

Saving Envelope for future issues
Copy paper can be used very much
in need of any and all kinds
THANKS!!!

LOUISVILLE, KY 402
DM
19 JUL
1991

29
FIFTIETH ANNIVERSARY

TAP Magazine
P.O. Box 20264
Louisville, KY 40250-0264

3

4/2